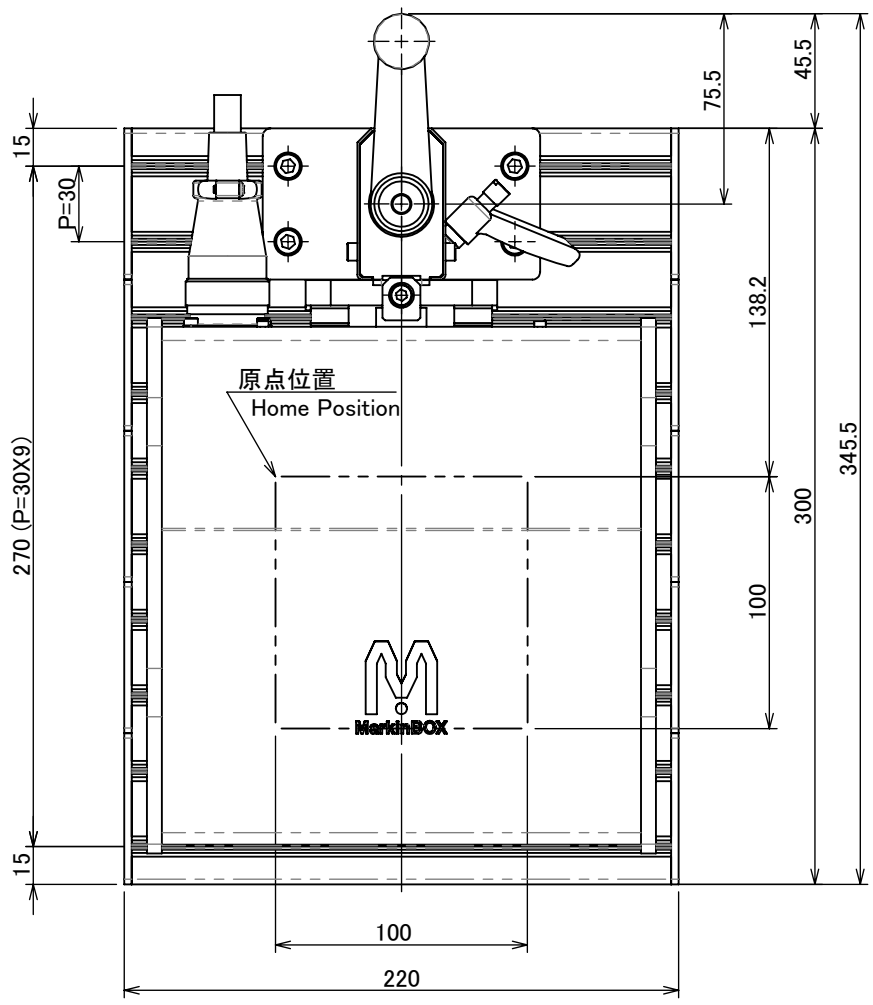

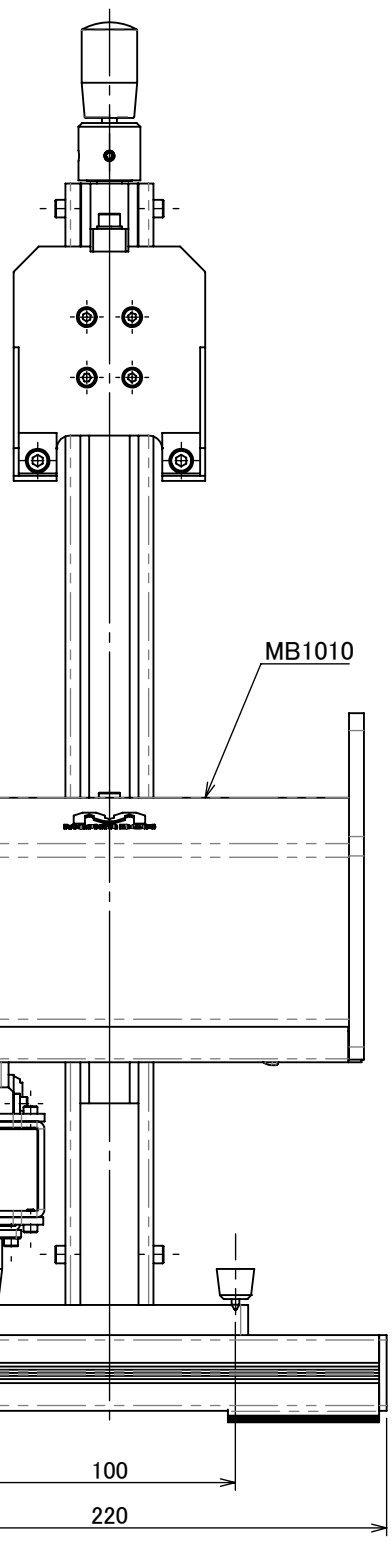

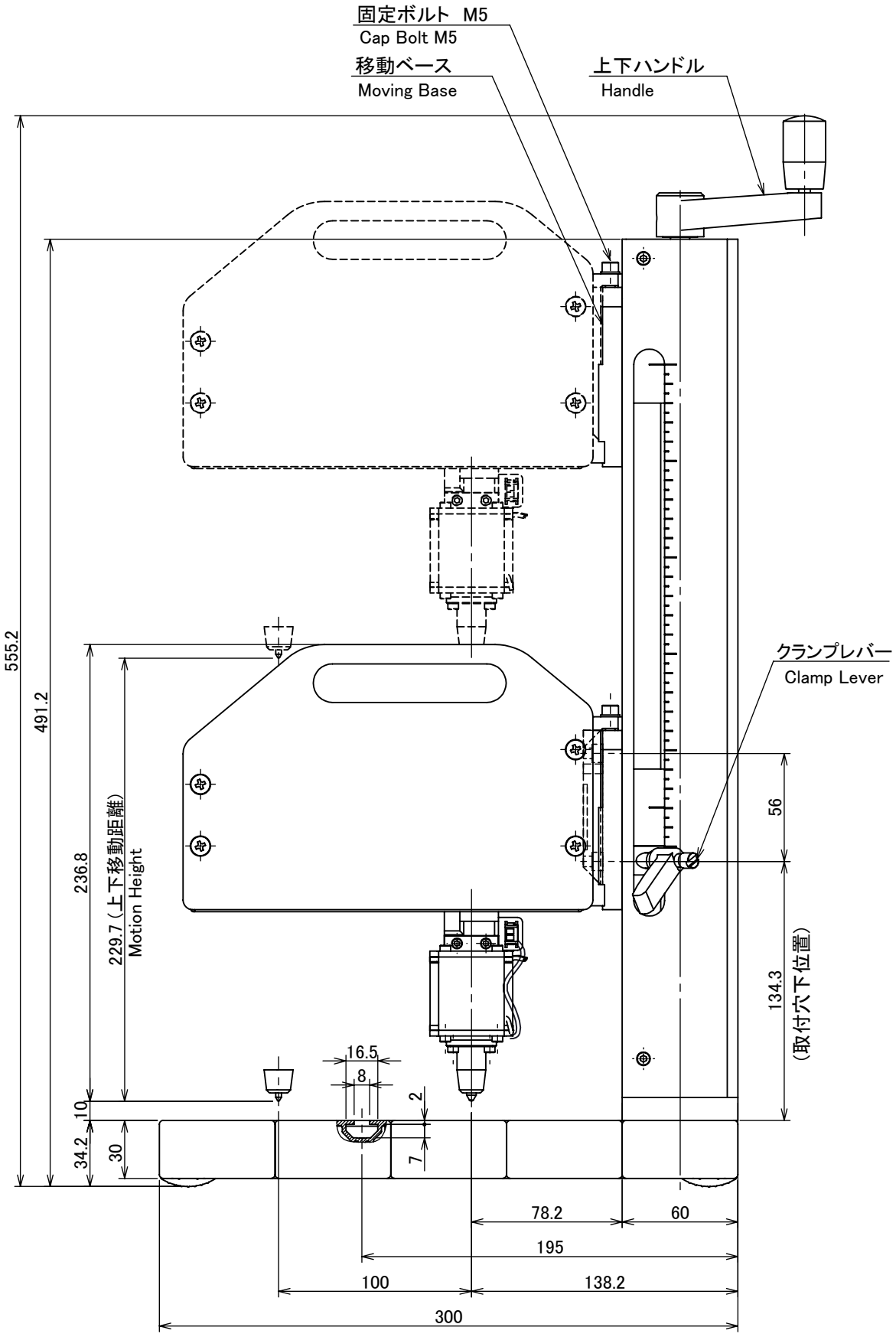

Tocho Marking Systems,Inc.	Title of Drawing	Rev.	Date	Scale
	MB1010 SA + BSD (with stand)	A	2023.12.01	1 : 3